APPROX. WEIGHT (LBS)
122

ECO No	DESCRIPTION	REV BY	DATE
M9058	UPDATE TO CURRENT DRAWING STANDARDS	MN	03/25/14

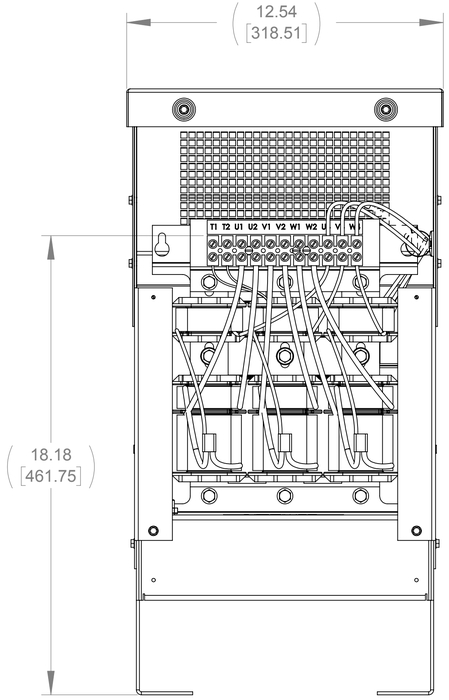

FRONT VIEW
(PANELS REMOVED)

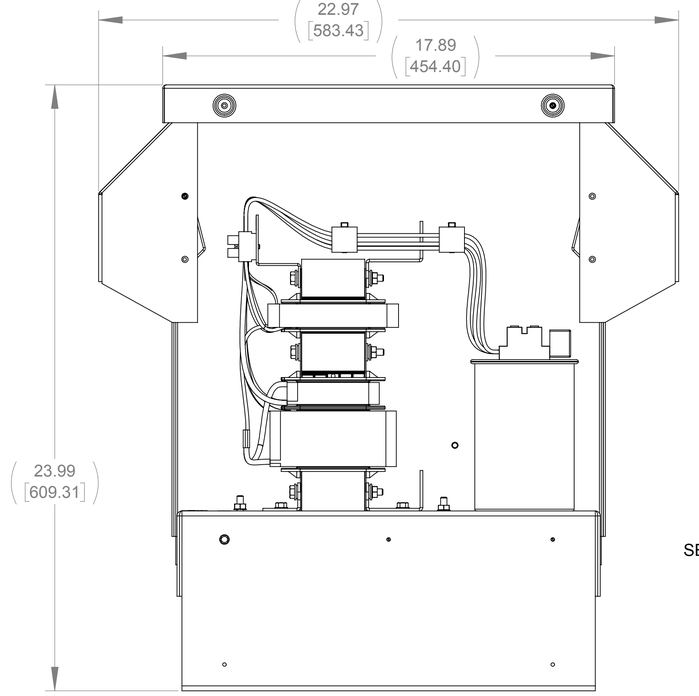

SIDE VIEW
(PANELS REMOVED)

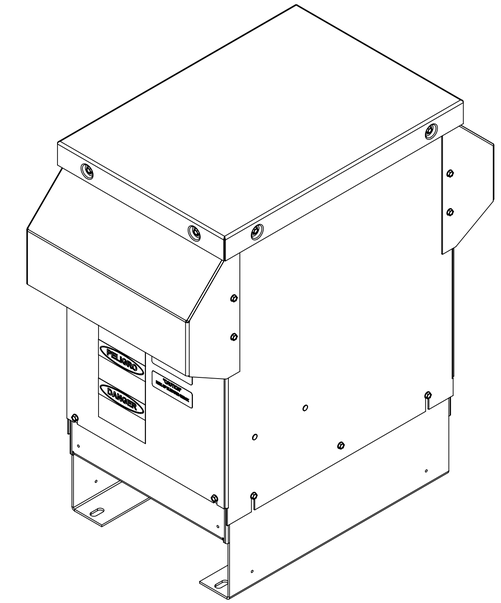

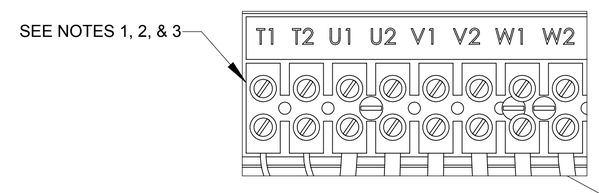

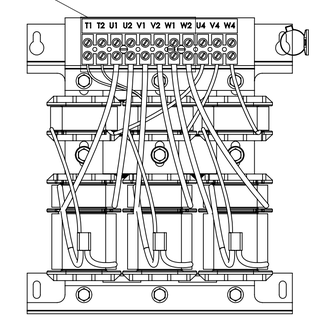

CUSTOMER CONNECTION
DETAIL VIEW AT REACTOR

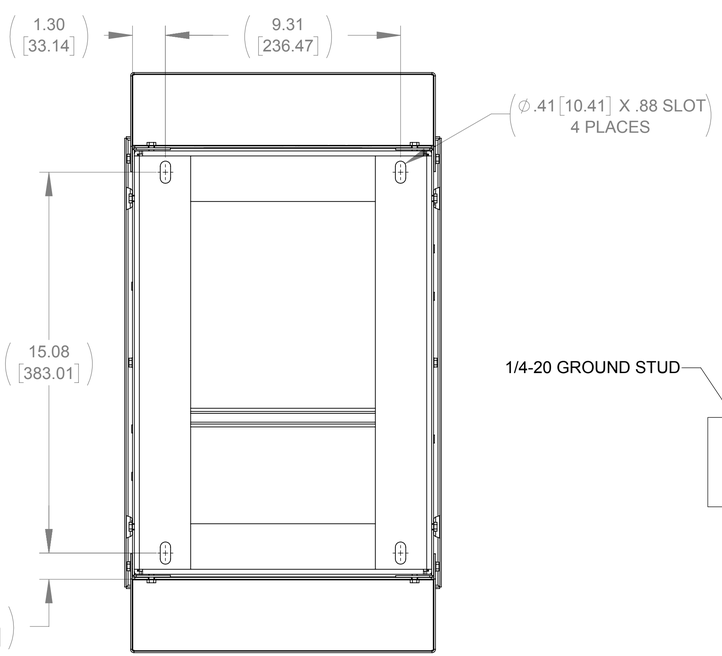

BOTTOM VIEW

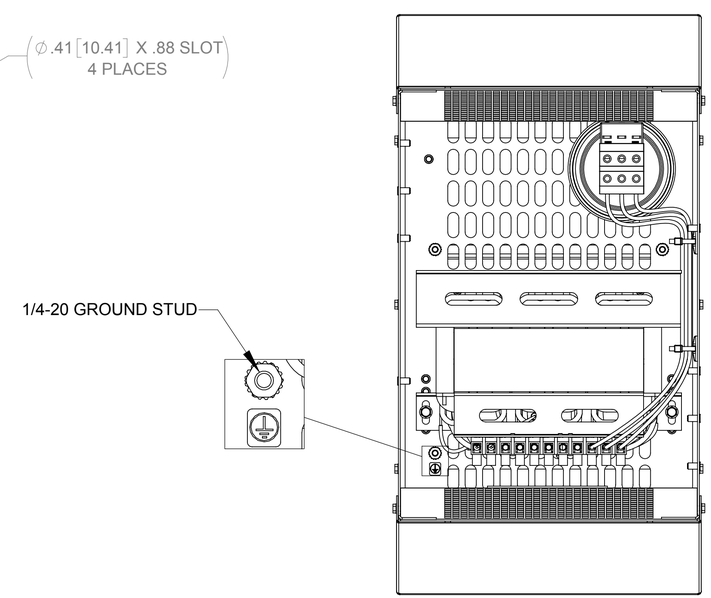

TOP VIEW
(PANEL REMOVED)

NOTES:

1. **TERMINAL SCREW TIGHTENING TORQUE: 16 IN/LBS, MAX.**
2. **WIRE RANGE: 4-14 AWG.**
3. **CUSTOMER DOES NOT CONNECT TO U4, V4, & W4 LOCATED ON THE REACTOR TERMINAL BLOCK.**

THE COMPONENT, PART OR ASSEMBLY DESCRIBED IN THIS DOCUMENT MUST COMPLY WITH THE EU(EUROPEAN UNION) DIRECTIVE RoHS2

CONTAINS <0.1% OF ANY SVHC BY WEIGHT PER REACH REGULATION

UNLESS OTHERWISE SPECIFIED DIMENSIONS ARE IN INCHES [MM] TOLERANCES ARE:

ANGLES: ± 1 °

1 PLACE .X: ± .1 **[2.5]**

2 PLACE .XX: ± .03 **[0.76]**

3 PLACE .XXX: ± .010 **[0.254]**

MTE
AN BL POWER ELECTRONICS COMPANY

N83 W13330 Leon Road
Menomonee Falls, WI 53051 USA
800.455.4683
262.253.8200

MATERIAL

DRAWN	DATE
JP	05/03/12
CHECKED	**DATE**
RH	03/26/14
APPROVED	**DATE**
RH	03/26/14

CONFIDENTIAL AND PROPRIETARY INFORMATION
THIS DOCUMENT CONTAINS CONFIDENTIAL AND PROPRIETARY INFORMATION OF MTE CORPORATION AND MAY NOT BE USED, COPIED OR DISCLOSED TO OTHERS EXCEPT WITH THE AUTHORIZED WRITTEN PERMISSION OF MTE CORPORATION

DESCRIPTION

MATRIX AP 34A 480V 60HZ
FILTER, NEMA 3R ENCLOSURE

SIZE	DWG No	REV
D	CD MAPW0034D	01
SCALE 1:3		SHEET 1 OF 1